USB-C Encoder/Decoder

NJR-L11UC-T/NJR-L31UC-R

User Guide
Ver.1.0.0



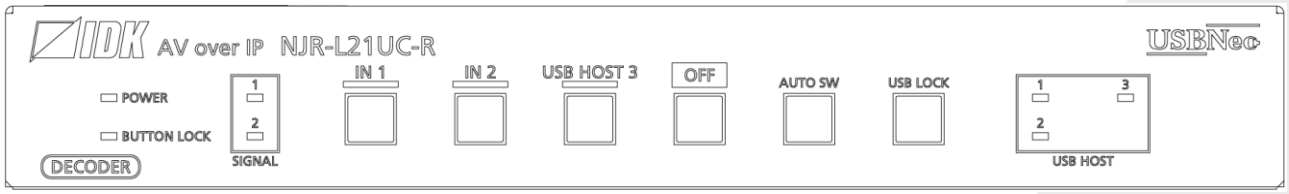

Thank you for choosing our product.
Please thoroughly familiarize yourself with this guide before installing this equipment. We recommend keeping this manual together with the equipment for future reference as needed.

IDK Corporation

- All rights reserved.

- Some information contained in this guide such as exact product appearance, communication commands, and so on may differ depending on the product version.
- This guide is subject to change without notice. You can download the latest version from IDK's website at: www.idkav.com

About technical documentation

■ Please read the following guides before connecting this equipment to a power source.

1. Safety Instructions Contains important safety instructions for the product to help ensure your own personal safety and protect the product and working environment from potential damage.	Provided with the product.
2. Setup Guide Contains setup information and precautions for installing the product and connecting cables.	Download from www.idkav.com

■ Please refer to the following guides as needed.

3. Operation Guide Describes how to configure and use the equipment.	Download from www.idkav.com
4. User Guide Contains detailed explanation of functions, setting values, and restrictions.	
5. Command Guide Contains information on controlling the equipment using communication commands through RS-232C or LAN communication.	

Trademarks

- HDBaseT™ and the HDBaseT Alliance Logo are trademarks of the HDBaseT Alliance.
- The terms HDMI and HDMI High-Definition Multimedia Interface, and the HDMI Logo are trademarks or registered trademarks of HDMI Licensing Administrator, Inc. in the United States and other countries.
- SDVoE™ and SDVoE logo are trademarks of SDVoE Alliance.
- All other company and product names mentioned in this document are either registered trademarks or trademarks of their respective owners. In this document, the "®" or "™" marks may not be specified.
- ©2026 IDK Corporation, all rights reserved.

FCC STATEMENT

Note: This equipment has been tested and found to comply with the limits for a Class A digital device, pursuant to part 15 of the FCC Rules. These limits are designed to provide reasonable protection against harmful interference when the equipment is operated in a commercial environment. This equipment generates, uses, and can radiate radio frequency energy and, if not installed and used in accordance with the instruction manual, may cause harmful interference to radio communications. Operation of this equipment in a residential area is likely to cause harmful interference, in which case the user will be required to correct the interference at his own expense.

(Class A)

Supplier's Declaration of Conformity
47 CFR § 2.1077 Compliance Information

Unique Identifier
Type of Equipment: USB-C Encoder/Decoder
Model Name: NJR-L11UC-T, NJR-L21UC-R
Responsible Party – U.S. Contact Information
Company Name: IDK America Inc.
Address: 72 Grays Bridge Road Suite 1-C, Brookfield, CT 06804
Telephone number: +1-203-204-2445
URL: www.idkav.com
FCC Compliance Statement
This device complies with Part 15 of the FCC Rules. Operation is subject to the following two conditions: (1) This device may not cause harmful interference, and (2) this device must accept any interference received, including interference that may cause undesired operation.

(FCC SDoC)

CE MARKING

This equipment complies with the essential requirements of the relevant European health, safety and environmental protection legislation.

WEEE MARKING



Waste Electrical and Electronic Equipment (WEEE), Directive 2002/96/EC
(This directive is only valid in the EU.)
This equipment complies with the WEEE Directive (2002/96/EC) marking requirement. The left marking indicates that you must not discard this electrical/electronic equipment in domestic household waste.

Safety Instructions

Read all safety and operating instructions before using this product. Follow instructions and heed warnings/cautions.
Instructions and warnings/cautions for all products are provided. Some of them may not be applicable to your product.

Warning	Indicates the presence of a hazard that may result in death or serious personal injury if the warning is ignored or the product is handled incorrectly.
Caution	Indicates the presence of a hazard that may cause minor personal injury or property damage if the caution is ignored or the product is handled incorrectly.

Symbol	Description	Example
 Caution	This symbol is intended to alert the user. (Warning and caution)	 Hot surfaces Caution
 Prohibited	This symbol is intended to prohibit the user from specified actions.	 Do not disassemble
 Instruction	This symbol is intended to instruct the user.	 Unplug

Warning

For lifting heavy products:

 Instruction	**● Lifting must be done by two or more personnel.** To avoid injury: When lifting the product, bend your knees, keep your back straight and get close to it with two or more persons.

For installing and connecting products:

 Prohibited	**● Do not place the product in unstable place.** Install the product in a horizontal and stable place, as this may fall or tip over and cause injury. **● Secure the product if installing in the locations with vibration.** Vibration may move or tip over the product unexpectedly, resulting in injury.

Warning

 Instruction	**● Installation work must be performed by professionals.** The product is intended to be installed by skilled technicians. For installation, please contact a system integrator or IDK. Improper installation may lead to the risk of fire, electric shock, injury, or property damage. **● Insert the power plug into an outlet that is unobstructed.** Unobstructed access to the plug enables unplugging the product in case of any extraordinary failure, abnormal situation or for easy disconnection during extended periods of non-use. **● Insert the power plug into an appropriate outlet completely.** If the plug is partially inserted, arching may cause the connection to overheat, increasing the risk of electric shock or fire. Do not use a damaged plug or connect to a loose outlet. **● Unplug the product from an AC power source during installation or service.** When connecting peripheral devices to this product, unplug all involved devices from outlets. Ground potential differences may cause fire or other difficulties. **● The product must be electrically earthed/grounded.** To reduce the risk of electric shock, ensure the product is connected to a mains socket outlet with a protective earthing connection. **●For powering/powered, use a compliant cable.** Otherwise, it may cause problems or a fire.

For operating products:

 Prohibited	**● Keep out any foreign objects.** To avoid fire or electric shock, do not permit foreign objects, such as metal and paper, to enter the product from vent holes or other apertures. **●For power cables, plugs, and cables for powering/powered,** **・ Do not scratch, heat, or modify, including splicing or lengthening them.** **・ Do not pull, place heavy objects on them, or pinch them.** **・ Do not bend, twist, tie or clamp them together forcefully.** Misuse of the power cable and plug may cause fire or electric shock. If power cables/plugs become damaged, contact your IDK representative.
 Do not disassemble	**● Do not repair, modify or disassemble.** Since the product includes circuitry that uses potentially lethal, high voltage levels, disassembly by unauthorized personnel may lead to the risk of fire or electric shock. For internal inspection or repair, contact your IDK representative.
 Do not touch	**● Do not touch the product and connected cables during electric storms.** Contact may cause electric shock.
 Instruction	**● Clean the power plug regularly.** If the plug is covered in dust, it may increase the risk of fire.

If the following problem occurs:

 Unplug	**● Unplug immediately if the product smokes, makes unusual noise, or produces a burning odor.** **● Unplug immediately if the product is damaged by falling or having been dropped.** **● Unplug immediately if water or other objects are directed inside.** If you continue to use the product under these conditions, it may increase the risk of electric shock or fire. For maintenance and repair, contact your IDK representative.

Caution

For installing and connecting products:

 **Prohibited**	**● Do not place the product in a location where it will be subjected to high temperatures.** If the product is subjected to direct sunlight or high temperatures while under operation, it may affect the product's performance and reliability and may increase the risk of fire. **● Do not store or operate the product in dusty, oil smoke filled, or humid place.** Placing the product in such environment may increase the risk of fire or electric shock. **● Do not block the vent holes.** If ventilation slots are blocked, it may cause the product to overheat, affecting performance and reliability and may increase the risk of fire. **● Do not place or stack heavy items on the product.** Failure to observe this precaution may result in damage to the product itself as well as other property and may lead to the risk of personal injury. **● Do not exceed ratings of outlet and wiring devices.** Exceeding the rating of an outlet may increase the risk of fire and electric shock.
 **No wet hands**	**● Do not handle power plug with wet hands.** Failure to observe this precaution may increase the risk of electric shock.
 **Instruction**	**● Use and store the product within the specified temperature/humidity range.** If the product is used outside the specified range of temperature and humidity continuously, it may increase the risk of fire or electric shock. **● Do not place the product at elevations of 1.24 mi. (2,000 m) or higher above sea level.** Failure to do so may shorten the life of the internal parts and result in malfunctions. **● When mounting the product into the rack, provide sufficient cooling space.** Mount the product in a rack meeting EIA standards, and maintain spaces above and below for air circulation. For your safety as required, attach an L-shaped bracket in addition to the panel mount bracket kit to improve mechanical stability. **● Never insert screws without the rubber feet into the threaded holes on the bottom of the product.** Never insert screws alone into the threaded holes on the bottom of the product. Doing so may lead to damage when the screws contact electric circuitry or components inside the product. Reinstall the originally supplied rubber feet using the originally supplied screws only.

For operating products:

 **Hot surfaces Caution**	**For products with the hot surfaces caution label only:** **● Do not touch the product's hot surface.** If the product is installed without enough space, it may cause malfunction of other products. If you touch product's hot surface, it may cause burns.
 **Prohibited**	**● Use only the supplied power cable and AC adapter.** **● Do not use the supplied power cable and AC adapter with other products.** If non-compliant adapter or power cables are used, it may increase the risk of fire or electric shock.
 **Unplug**	**● If the product won't be used for an extended period of time, unplug it.** Failure to observe this precaution may increase the risk of fire. **● Unplug the product before cleaning.** To prevent electric shock.
 **Instruction**	**● Do not prevent heat release.** If cooling fan stops, power off the product and contact IDK. Failure to do so may raise internal temperature and increase the risk of malfunction, fire, or electric shock. **● Keep vents clear of dust.** If the vent holes near the cooling fan or near the fan are covered with dust, internal temperatures increase and may increase the risk of malfunction. Clean the vent holes and near the fan as needed. If dust accumulates inside of the product, it may increase the risk of fire or electric shock. Periodic internal cleaning, especially before humid rainy season, is recommended. For internal cleaning, contact your IDK representative.

Contents

About this Guide 10
Conventions 10
About this Product 11
Setting 12
DIP switch 13
RS-232C transmission mode 13
Stopping sending device detection packet 14
Disabling HDCP or EDID settings 14
Disabling EDID resolution 14
Output 15
Video signal output 15
DDC 5V signal output for when no video signal is input 15
Signal format 16
HDCP authentication 16
Hot plug ignoring duration 17
Input 18
Hot plug output for when there is no active video input signal 18
HDCP input 20
Input channel automatic switching 21
Automatic switching 21
Automatic switching priority for when a video input signal is detected 21
Automatic switching priority for when no active video signal is input 21
Ignoring duration after automatic switching 22
Output audio 23
Mute 23
Input audio 23
Input audio selection 23
EDID 24
EDID selection 24
Resolution 25
Copying EDID 25
Signal format 26
Frame rate 26
Deep Color 26
Audio format 27
Speaker Configuration 28
RS-232C 29
Communication setting 29
Channel selection 29
LAN 30
Network 30
MAC address 30
Automatic disconnection time (Timeout) 31
Communication of extension connector 31
Start-up settings 32
Input channel 32
USB host 32
Button security lockout 32

System 33
USB-C power delivery 33
USB-C function 33
USB host lock 33
Fan speed 33
Front panel security lockout 33
Backup/Restore 34
Reboot 34
Initialization of all settings 34
Status 34
Factory default list 35
License 36
Specification 37
Product specification 37
Supported video signals 39
Troubleshooting 40

About this Guide

This guide describes features, notes, and configurations of the NJR-L.

Conventions

- The following symbols are used in this guide.
  [ ] : Menus and messages displayed on the front display and a WEB GUI.
  “ ” : Reference
- ***Note*** : Addresses practices not related to personal injury, such as restrictions and attention.

About this Product

The NJR-L11UC-T/NJR-L21UC-R are an encoder/decoder set for transmitting HDMI and USB-C video signals, RS-232C, LAN, and USB over CAT6A for point-to-point or AV over IP distribution. These NJR devices support video resolutions up to 4K@60 (4:4:4) and is HDCP 2.2 compliant.

For video inputs, the NJR-L11UC-T encoder includes one (1) USB-C which is output over CAT6A (SDVoE) to the decoder. The NJR-L21UC-R (decoder) has one (1) USB-C input and one (1) 10GbE CAT (SDVoE), one of which can be selected and output out the local HDMI output.

The NJR-L11UC-T (Encoder) features one (1) USB host port and one (1) USB device port. The NJR-L21UC-R (decoder) includes two (2) USB host ports and three (3) USB device ports enable host switching and USB hub features. Host privileges are assigned to the channel that's been selected. If the encoder becomes the host, the USB devices attached to the decoder are shared to the encoder over a single CAT6A cable, or vice versa. The Host can connect to the USB devices of either the NJR-L11UC-T or NJR-L21UC-R. Additionally, the USB-C connector supports USB Power Delivery that can provide power up to 75 W.

The NJR can be configured and controlled remotely using RS-232C or LAN.

This product can be used in combination with other SDVoE products within IDK's product portfolio.

Setting

The NJR-L can be set using the IP-NINJAR Configurator or NJR-CTB (IP-NINJAR Management Platform). Set “**Stopping sending device detection packet (P.14)**” to [OFF]. If it is set to [ON], the IP-NINJAR Configurator or NJR-CTB cannot detect the NJR-L.

The table below is used in this chapter.
Example:

Item	NO INPUT MONITORING	Command
For	HDMI IN	
Value	OFF, 2s to 15s (10s) (by 1s) Default value is shaded.	

DIP switch

[OFF] : Set a DIP switch to the upper position.
[ON] : Set a DIP switch to the down position.

Note

Set DIP switches No.1 and No.4 to [OFF] at all times.

RS-232C transmission mode

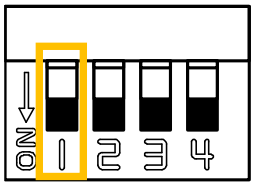

Item	RS-232C transmission mode
Value	DIP switch No.1 OFF, ON

[OFF] : Transmits signals to the connected RS-232C connector via a cable for extension.
[ON] : Controls the NJR-L from an external device.

The data received from the NJR-L's RS-232C connector can be transmitted to the connected RS-232C connector via a cable for extension.

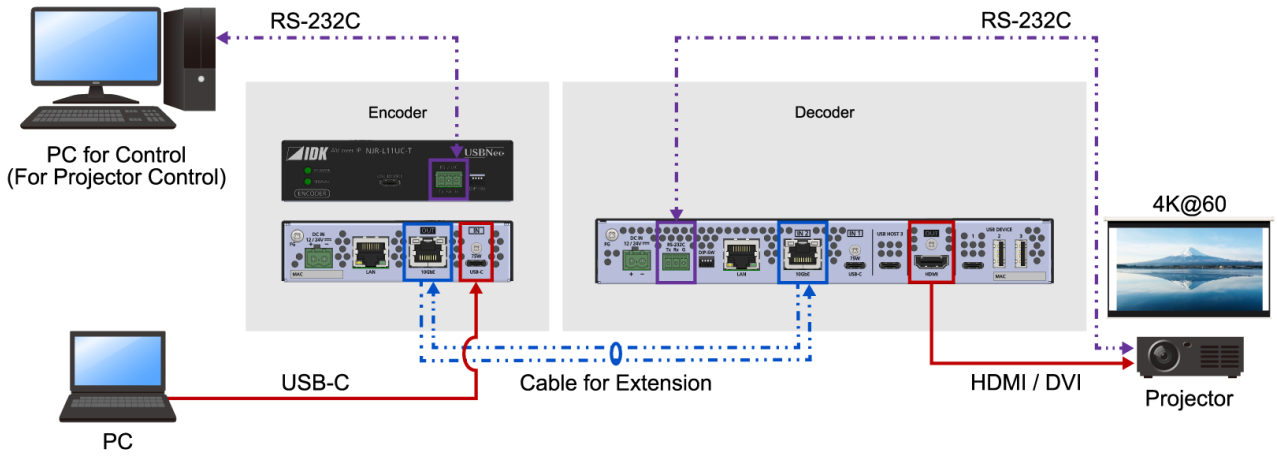

Stopping sending device detection packet

You can stop sending all device detection packets of 10GbE input/output.

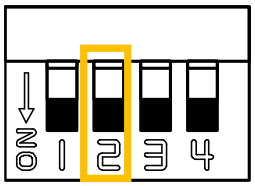

Item	Stopping sending device detection packet
Value	DIP switch No.2 OFF, ON

[OFF] : Sends device detection packet.
[ON] : Does not send device detection packet.

The NJR-L automatically sends device detection packet to LAN periodically for detection by the NJR-CTB or IP-NINJAR Configurator. If you do not want to send unnecessary packet to LAN, set DIP switch No.2 to [ON].

Note

If DIP switch No.2 is set to [ON], the IP-NINJAR Configurator or NJR-CTB cannot detect the NJR-L.

Disabling HDCP or EDID settings

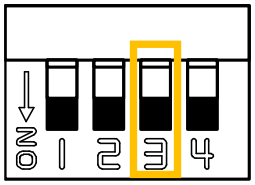

Item	Disabling HDCP or EDID settings
For	IN1, IN2, IN3, HDMI OUT
Value	DIP switch No.3 OFF, ON

[OFF] : Enables the settings of “**HDCP authentication (P.16)**” or ”**EDID (P.24)**”.
[ON] : Disables the settings of “**HDCP authentication (P.16)**” or ”**EDID (P.24)**”. Settings below will be applied.
HDCP authentication : HDCP INPUT ONLY
EDID : EXTERNAL EDID

Disabling EDID resolution

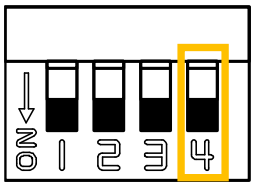

Item	Disabling EDID resolution
For	IN1, IN2
Value	DIP switch No.4 OFF, ON

[OFF] : Enables the settings of “**Resolution (P.25)**”.
[ON] : Disables the settings of “**Resolution (P.25)**” and ”**Disabling HDCP or EDID settings (P.14)**”. The resolution is fixed at 1080p.

Output

Video signal output

Item	SIGNAL OUTPUT	@GVO/@SVO
For	HDMI OUT, SDVoE OUT	
Value	ON, OFF	

[OFF] : Stops outputting video signal and DDC 5 V signal electrically.

If [OFF] is selected, some sink devices may switched into standby mode.

DDC 5V signal output for when no video signal is input

You can set the DDC 5 V signal output when an input channel without video signal is selected or [OFF] is selected.

Item	DDC POWER CONTROL	N/A
For	HDMI OUT	
Value	ON, 0 s to 60 s	

[ON] : Outputs DDC 5 V signal at all times.
[0 s] to [60 s] : Disconnects DDC 5 V signal after the specified time passes.

When DDC 5 V signal is disconnected, a sink device may switch into standby mode.

Signal format

Item	SIGNAL FORMAT	N/A
For	HDMI OUT, SDVoE OUT	
Value	AUTO, YCbCr 4:4:4, YCbCr 4:2:2, YCbCr 4:2:0, RGB, DVI	

[AUTO] : Optimal color space for the connected device.
[YCbCr 4:4:4] : HDMI YCbCr 4:4:4 has priority.
[YCbCr 4:2:2] : HDMI YCbCr 4:2:2 has priority.
[YCbCr 4:2:0] : HDMI YCbCr 4:2:0 has priority.
Enabled only for input resolutions of 4K@50/59.94/60.
If the sink device does not support HDMI YCbCr 4:2:0 or the input resolution is 4K@30 or lower, video is output at the priority of [AUTO].
[RGB] : HDMI RGB has priority.
[DVI] : Outputs DVI signal.
Enabled only for input resolutions of 4K@30 or lower.

Note

If DVI signal is output, digital audio is not output.

HDCP authentication

Item	HDCP AUTHENTICATION	@GEN/@SEN
For	HDMI OUT	
Value	HDCP 2.2, HDCP INPUT ONLY, ALWAYS	

[HDCP 2.2] : HDCP 2.2 authentication
[HDCP INPUT ONLY] : HDCP 2.2 or HDCP 1.4 authentication depending on the sink device
Outputs signal depending on HDCP presence of input signal.
If input signal is protected by HDCP, outputs signal with HDCP.
If input signal is not protected by HDCP, outputs signal without HDCP.
[ALWAYS] : HDCP 2.2 or HDCP 1.4 authentication depending on the sink device

For a sink device that is not supported by HDCP, video is displayed only if this setting is set to a value other than [HDCP 2.2] and input signal is not supported by HDCP.

If [HDCP INPUT ONLY] is set, HDCP presence of output signal changes depending on HDCP presence of input signal. Some sink devices may not be displayed temporarily.

To enable this setting, set “**Disabling HDCP or EDID settings (P.14)**” of DIP switch No.3 to [OFF].

Hot plug ignoring duration

You can set the duration for ignoring video output request signals that are sent from the sink device.

Item	HOTPLUG MASK	N/A
For	HDMI OUT	
Value	OFF, 2s to 15s	

[OFF] : Always receives video output request signals from sink devices.

[2s] to [15s] : After receiving video output request signals, ignores these signals during the specified period.

If the signal request is repeated in a short cycle, the NJR-L resets the video output process. As a result, video may not be output. This problem can be solved by setting the ignoring duration.

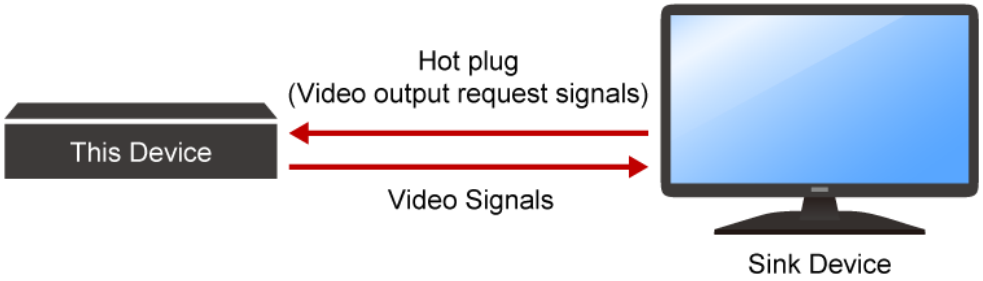

Input

Hot plug output for when there is no active video input signal

The NJR-L requests the source device to output video signal by sending hot plug when no active video signal is input. You can enable/disable this feature and set the request interval.

Item	NO INPUT MONITORING	N/A
For	IN1	
Value	OFF, 2s to 15s (10s)	

[OFF] : Does not request the source device to output video signal even if there is no active input signal.
[2s] to [15s] : Requests the source device to output video signal after the specified monitoring time if there is no active input signal.

If the NJR-L is powered on or EDID is changed with the connected source device is powered on, the source device may stop outputting video signal. In this case, use this feature to request the source device to output video signal.

■ Example: Video signal is output within the specified monitoring time

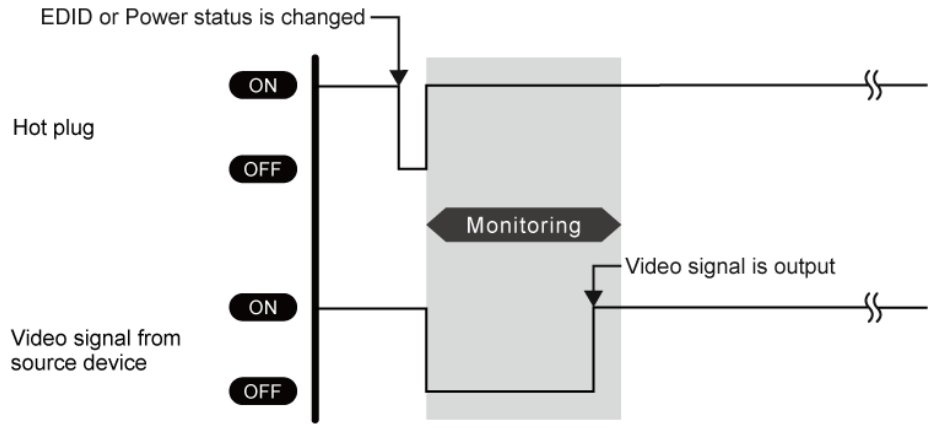

■ **Example: The source device stops outputting video signals → Hot plug request is needed.**

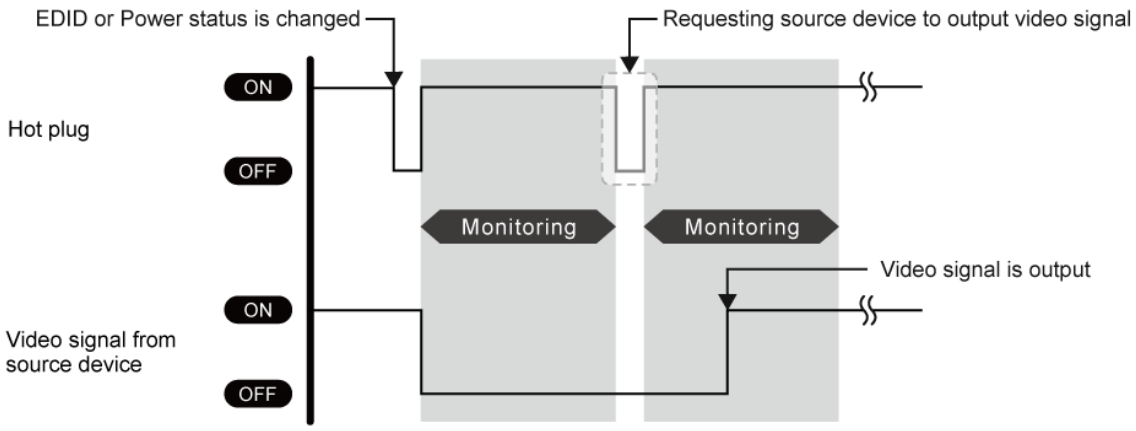

■ **Example: The specified monitoring time is too short. → Set the longer monitoring time.**

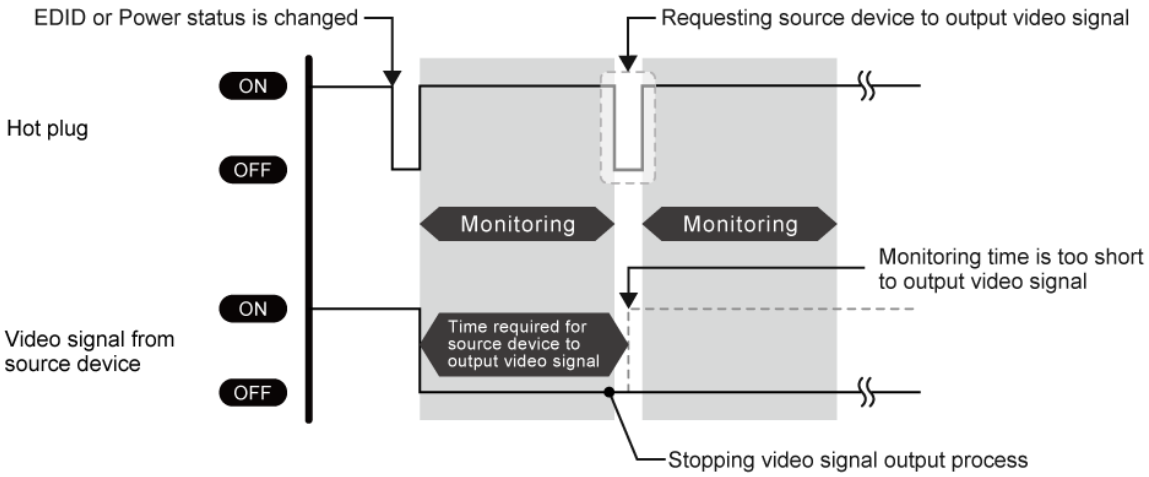

If the interval is shorter than the time for source device output video signal, the source device repeats the video output process and does not output video signal. This problem can be solved by setting longer monitoring time.

Note

If the source device, such as a PC, disables the monitor power-saving or dual monitor features, set this setting to [OFF].

HDCP input

Item	HDCP INPUT	@GHE/@SHE
For	IN1	
Value	HDCP 2.2 SUPPORT, HDCP 1.4 SUPPORT, NOT SUPPORT	

[HDCP 2.2 SUPPORT] : Operates as an HDCP 2.2 supported device.
[HDCP 1.4 SUPPORT] : Operates as an HDCP 1.4 supported device.
[NOT SUPPORT] : Operates as a non-HDCP compliant device

Some source devices negotiate with the connected device to determine if HDCP encryption is supported. After this negotiation, the source device determines whether HDCP signal encryption is enforced or not. This process takes place with some source device, even if the content being presented is not copyright protected. The NJR-L is HDCP compliant, if it is connected to a display device that does not support HDCP, unprotected AV content may not be successfully displayed. Under these circumstances and if the content is indeed not protected, the problem can be solved by setting this menu to [NOT SUPPORT].

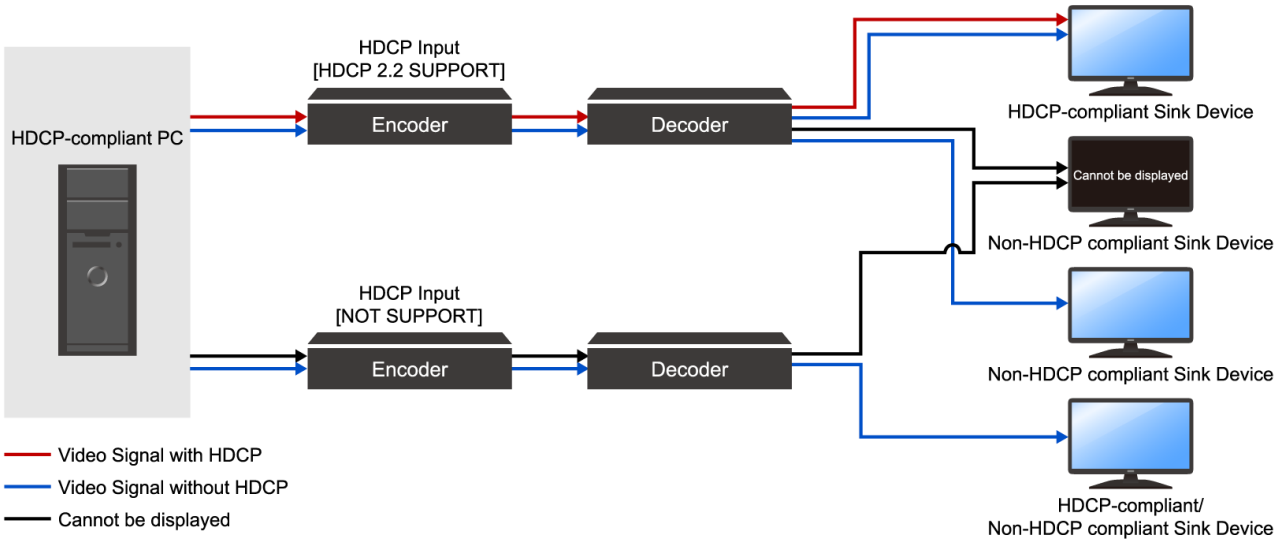

Note

HDCP 2.2 Type 0 video can be displayed on sink devices supporting HDCP 1.4.
HDCP 2.2 Type 1 video can be displayed on sink devices supporting HDCP 2.2 but cannot be displayed on sink devices supporting HDCP 1.4.

Input channel automatic switching

When video input signal is detected/disconnected, the NJR-L automatically switches input channel to the one having the highest priority of input channel that has active video input signal.

Automatic switching

Enabling/disabling the input channel automatic switching feature.

Item	AUTO SWITCHING	@GUU/@SUU
Value	ON, OFF	

Note: NJR-L21UC-R only

[ON]: When video input signal is detected/disconnected, the NJR-L automatically switches input channel according to "**Automatic switching priority for when a video input signal is detected (P.21)**" and "**Automatic switching priority for when no active video signal is input (P.21)**".

Automatic switching priority for when a video input signal is detected

You can set the priority for automatic switching at the time of video input signal is detected.

Item	SIGNAL ON PRIORITY	@GAU/@SAU
For	IN1 to IN2	
Value	OFF (Disabled), 1 (Highest) to 2 (Lowest)	

Note: NJR-L21UC-R only

If the priority of the detected input channel is lower than the priority of the selected input channel, automatic switching is not performed.

If the same priority if set to several input channels, the last detected input channel will have the first priority.

To enable automatic switching, set "**Automatic switching (P.21)**" to [ON].

Automatic switching priority for when no active video signal is input

You can set the priority for automatic switching at the time of video input signal of the current selected input is disconnected.

Item	SIGNAL OFF PRIORITY	@GOF/@SOF
For	IN1 to IN2, INOFF	
Value	OFF (Disabled), 1 (Highest) to 3 (Lowest)	

Note: NJR-L21UC-R only

If the same priority is set to several input channels, the smallest channel that detects video signal or USB host has the first priority. If there is no input channel having active video or USB hos signal, then it is switched to [ONOFF].

To enable automatic switching, set "**Automatic switching (P.21)**" to [ON].

Ignoring duration after automatic switching

You can set the time for disabling automatic switching temporarily after automatic input channel switching is performed.

Item	IGNORING DURATION	N/A
Value	0s to 10s	

Note: NJR-L21UC-R only

If video input signal is detected or disconnected in a short interval, the automatic switching is performed repeatedly. To avoid undesired automatic switching, set the ignoring duration.

Output audio

Mute

You can mute/unmute the output audio.

Item	MUTE	@GAM/@SAM
For	HDMI OUT, SDVoE OUT	
Value	ON, OFF	

[ON]: Mute

Input audio

Input audio selection

You can select the audio of 10GbE input connector from digital or analog input audio.
Analog input audio is available when using IP-NINJAR encoder or transceiver that has analog audio input.

Item	SDVoE AUDIO	N/A
For	IN2	
Value	DIGITAL, ANALOG	

EDID

A source device that is connected to the input connector obtains information of supported video and audio signals from the EDID. You can change the information to be sent to a source device.

To enable EDID settings from an encoder, set “**Disabling HDCP or EDID settings (P.14)**” of the DIP switch No.3 to [OFF].

EDID selection

You can set the EDID that will be sent to source device.

Item	EDID SELECTION	@GED/@SED
For	IN1, IN2	
Value	BUILT-IN EDID, EXTERNAL EDID, COPY DATA	

[BUILT-IN EDID] : Uses the built-in EDID. You can change the following EDID information:
【Resolution (P.25)】
【Signal format (P.26)】
【Frame rate (P.26)】
【Deep Color (P.26)】
【Audio format (P.27)】
【Speaker Configuration (P.28)】

[EXTERNAL EDID] : Uses the EDID of the sink device that is connected to an output connector.
If EDID reading fails, the EDID is not changed.

[COPY DATA] : Uses the EDID that is saved to the NJR-L in “**Copying EDID (P.25)**”.

Note

If HDR signal is used, set this menu to [EXTERNAL EDID] or copy EDID of the sink device supporting HDR signals and set this menu to [COPY DATA].

Resolution

You can set the resolution of the NJR-L for if "**EDID (P.24)**" is set to [BUILT-IN EDID].

Item	RESOLUTION		@GVF/@SVF
For	IN1, IN2		
Value	800x600 (SVGA) 1024x768 (XGA) 1280x720 (VESA720) 720p 1280x768 (WXGA) 1280x800 (WXGA) 1280x960 (QuadVGA) 1280x1024 (SXGA) 1360x768 (WXGA) 1366x768 (WXGA)* 1400x1050 (SXGA+) 1440x900 (WXGA+) 1600x900 (WXGA++) 1600x1200 (UXGA) 1680x1050 (WSXGA+) 1080i* 1920x1080 (VESA1080)	1080p 1920x1200 (WUXGA) 2048x1152 (QWXGA) 2560x1080 (UWFHD) 2560x1440 (WQHD) 2560x1600 (WQXGA) 3240x1080 3440x1440 (UWQHD) 3840x1080 (DFHD) 3840x1600 (UWQHD+) 3840x2160@30 3840x2160@60 4:2:0 3840x2160@60 4:4:4 4096x2160@30 4096x2160@60 4:2:0 4096x2160@60 4:4:4	

*USB-C input connector cannot be selected.

Timing of [720p]/[1080i]/[1080p]/[2560x1080]/3840x2160]/[4096x2160] meets the CTA-861 standard.
For other resolutions, timing parameters meet the VESA DMT or VESA CVT standard.

Copying EDID

The EDID of the sink device is read and saved to the NJR-L.

Item	EDID COPY	N/A
For	-	
Value	-	

Signal format

You can set the signal format of the NJR-L for if “**EDID (P.24)**” is set to [BUILT-IN EDID].

Item	SIGNAL FORMAT	N/A
For	IN1, IN2	
Value	HDMI, DVI	

[HDMI] : Sets the NJR-L as an HDMI device.
[DVI] : Sets the NJR-L as a DVI device. Audio signal is not supported.

If selecting [DVI], the following settings will be disabled:
【Deep Color (P.26)】
【Audio format (P.27)】
【Speaker Configuration (P.28)】

Frame rate

You can set the vertical synchronous frequency (frame rate) of the NJR-L for if “**EDID (P.24)**” is set to [BUILT-IN EDID].

Item	FRAME RATE	N/A
For	IN1, IN2	
Value	60Hz, 50Hz	

If selecting [50Hz], 60 Hz and 30 Hz vertical synchronous frequency of “**Resolution (P.25)**” will be 50 Hz and 25 Hz, respectively.

Deep Color

You can set the color depth of the NJR-L for if “**EDID (P.24)**” is set to [BUILT-IN EDID].

Item	DEEP COLOR	N/A
For	IN1, IN2	
Value	24-BIT COLOR, 30-BIT COLOR, 36 BIT COLOR	

If selecting a value other than [24-BIT COLOR] and the source device output video at 30 bit or higher, it may cause noise on the video or signal may not be transmitted. In such a case, the problem may be solved by setting the color to [24-BIT COLOR].

Audio format

You can set the NJR-L's audio format and maximum sampling frequency for if "**EDID (P.24)**" is set to [BUILT-IN EDID].

Item	AUDIO FORMAT	N/A
For	IN1	
Value	PCM : 32kHz, 44.1kHz, 48kHz, 88.2kHz, 96kHz, 192kHz	

Item	AUDIO FORMAT	N/A
For	IN2	
Value	PCM : 32kHz, 44.1kHz, 48kHz, 88.2kHz, 96kHz, 176.4kHz, 192kHz Dolby Digital : OFF, 32kHz, 44.1kHz, 48kHz AAC : OFF, 32kHz, 44.1kHz, 48kHz, 88.2kHz, 96 kHz Dolby Digital+ : OFF, 32kHz, 44.1kHz, 48kHz DTS : OFF, 32kHz, 44.1kHz, 48kHz, 96kHz DTS-HD : OFF, 44.1kHz, 48kHz, 88.2kHz, 96kHz, 176.4kHz, 192kHz Dolby TrueHD: OFF, 44.1kHz, 48kHz, 88.2kHz, 96kHz, 176.4kHz, 192kHz	

Note:

LC monitors do not support some audio formats. Select an audio format and sampling frequency supported by the device.

Speaker Configuration

You can set the NJR-L's speaker configuration of multi-channel audio for if "**EDID (P.24)**" is set to [BUILT-IN EDID].

Item	SPEAKER CONFIGRATION		N/A
For	IN2		
	Number of speakers	Speaker configuration	
Value	1 to 8 (2)	See the table below	
		ON, OFF* *FL/FR: ON	

Number of speakers	FL/ FR	LFE	FC	RL/ RR	RC	FLC/ FRC	RLC/ RRC	FLW/ FRW	FLH/ FRH	TC	FCH
1	OFF	OFF	ON	OFF	OFF	OFF	OFF	OFF	OFF	OFF	OFF
2	ON	OFF	OFF	OFF	OFF	OFF	OFF	OFF	OFF	OFF	OFF
3	ON	ON	OFF	OFF	OFF	OFF	OFF	OFF	OFF	OFF	OFF
4	ON	ON	ON	OFF	OFF	OFF	OFF	OFF	OFF	OFF	OFF
5	ON	ON	OFF	ON	OFF	OFF	OFF	OFF	OFF	OFF	OFF
6	ON	ON	ON	ON	OFF	OFF	OFF	OFF	OFF	OFF	OFF
7	ON	ON	ON	ON	ON	OFF	OFF	OFF	OFF	OFF	OFF
8	ON	ON	ON	ON	OFF	OFF	ON	OFF	OFF	OFF	OFF

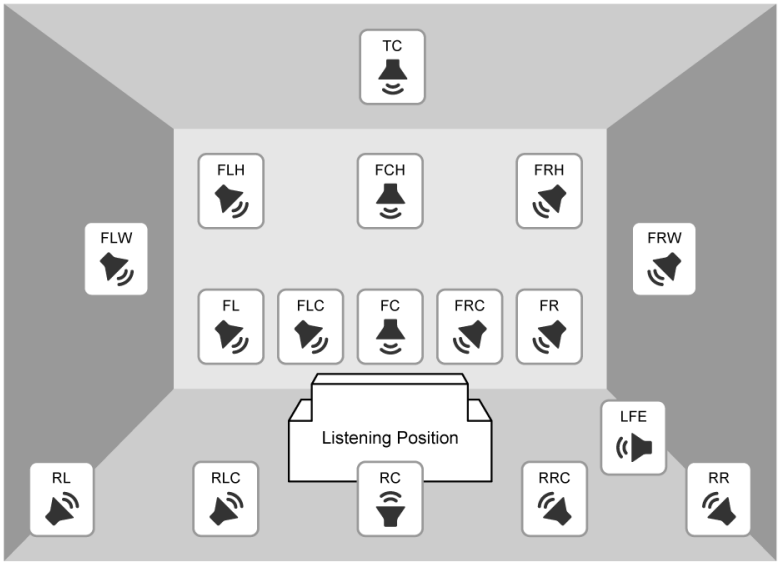

FL	Front Left
FC	Front Center
FR	Front Right
FLC	Front Left Center
FRC	Front Right Center
RL	Rear Left
RC	Rear Center
RR	Rear Right
RLC	Rear Left Center

RRC	Rear Right Center
LFE	Low Frequency Effect
FLW	Front Left Wide
FRW	Front Right Wide
FLH	Front Left High
FCH	Front Center High
FRH	Front Right High
TC	Top Center

RS-232C

Communication setting

Item	PARAMETERS			@GCT/@SCT
For	RS-232C TRANSMISSION, RS-232C RECEIVER			
	Baud rate [bps]	Data bit length [bit]	Parity check	Stop bit [bit]
Value	4800, 9600, 14400, 19200, 38400, 57600, 115200	7, 8	NONE, ODD, EVEN	1, 2

■ RS-232C TRANSMISSION

Communication setting for the RS-232C connector for when DIP switch No.1 “**RS-232C transmission mode (P.13)**” is set to [OFF] (Transmitting to the connected RS-232C connector via a cable for extension).

■ RS-232C RECEIVER

Communication setting for the RS-232C connector for when DIP switch No.1 “**RS-232C transmission mode (P.13)**” is set to [ON] (Controlled from an external device).

Channel selection

RS-232C communication is available in the USB connectors of IN1 (UBS-C) or USB HOST 3 (USB-C). Either IN1 (UBS-C) or USB HOST 3 (USB-C) can be used; it cannot be used simultaneously.

Menu	INPUT CHANNEL	@GRP/@SRP
Parameter	INPUT USB	
Value	IN1, USB HOST 3	

LAN

Network

Item	IP ASSIGNMENT	@GIP/@SIP
Value	STATIC, DHCP/AutoIP, AutoIP	

Item	IP ADDRESS	@GIP/@SIP
Value	0.0.0.0 to 255.255.255.255 (192.168.1.199)	

Item	SUBNET MASK	@GIP/@SIP
Value	0.0.0.0 to 255.255.255.254 (255.255.255.0)	

Item	GATEWAY ADDRESS	@GIP/@SIP
Value	0.0.0.0 to 255.255.255.255 (0.0.0.0)	

The NJR-L can automatically acquire IP addresses using AUTO IP or DHCP (Dynamic Host Configuration Protocol).
If [IP ASSIGNMENT] is set to [DHCP/AutoIP] or [AutoIP], the IP address, subnet mask, and gateway address are set automatically.
Immediately after [IP ASSIGNMENT] is changed, the LAN communication temporarily disconnects because the IP address changes. Try again later.

MAC address

Item	MAC ADDRESS	@GMC
Value	Specific values of the device	

Automatic disconnection time (Timeout)

You can set the time to disconnect LAN communication automatically.

Item	AUTO DISCONNECT	@GLD/@SLD
For	-	
Value	NOT DISCONNECT, 1s to 180s (30s)	

[NOT DISCONNECT] : Does not disconnect LAN communication.
[1 s] to [180 s] : Disconnect LAN communication when the set time passes.

Up to eight connections from an external device to the NJR-L can be set. The NJR-L disconnects the LAN communication if the NJR-L does not receive a command for the specified time.

If selecting [NOT DISCONNECT], the NJR-L does not disconnect the communication from its side. Communication may not be disabled if exceeding the connection limit.

Communication of extension connector

You can enable/disable the LAN communication of extension connector.

Item	LAN THROUGH	N/A
For	-	
Value	ON, OFF	

■ LAN loop problem

The NJR-L includes switching hub function. If two or more LAN communication connectors of the NJR-L are connected to the same network, the network may be down due to a loop problem. In this case, set the LAN communication to [OFF].

Start-up settings

You can specify the settings for when the NJR-L is powered ON or starts up.

Input channel

You can set the input channel status for when the NJR-L is powered ON.

Item	INPUT CHANNEL	N/A
For	VIDEO/AUDIO	
Value	IN1 to IN2, INOFF, LAST CHANNEL	

Note: NJR-L21UC-R only

[INOFF] : Starts up with input channel OFF.
[LAST CHANNEL]: Starts up with the previous channel.

USB host

You can set how the USB host starts.

Item	INPUT CHANNEL	N/A
For	USB HOST	
Value	IN1 to IN2, INOFF, LAST CHANNEL	

Note: NJR-L21UC-R only

[INOFF] : Starts up with input channel [OFF].
[LAST CHANNEL] : Starts up with the previous input channel.

Button security lockout

You can set the button security lockout when the NJR-L starts up.

Item	BUTTON LOCK	N/A
Value	AUTO, LOCK, UNLOCK	

Note: NJR-L21UC-R only

[AUTO] : Starts up with the previous status.
[LOCK] : Buttons are locked.
[UNLOCK] : Button are unlocked.

System

USB-C power delivery

You can set the power delivery of the USB-C connector (IN1).

Item	USB-C POWER DELIVERY	@GPD/@SPD
Value	75W, 65W, 60W, 15W, OFF	

Note

For power delivery, use a DC 24 V power supply.

USB-C function

You can set the function of the USB-C connector (IN1).

Item	USB-C FUNCTION	@GUF/@SUF
Value	FULL, DP ALT, DATA, PD ONLY	

[FULL] : DisplayPort Alternate Mode signals and USB2.0 data signals can be used.
[DP ALT] : DisplayPort Alternate Mode signals can be used.
[DATA] : USB2.0 data can be used.
[PD ONLY] : Only power delivery is enabled.

USB host lock

You can lock/unlock the USB host selection status.

Item	USB HOST LOCK	@GUL/@SUL
Value	LOCK, UNLOCK	

[LOCK]: The USB host status is fixed, and USB host selection of front panel operations or control commands will be disabled.

Fan speed

Item	FAN CONTROL	N/A
Value	AUTO, LOW, MIDDLE, HIGH	

[AUTO] : Changes the fan speed depending on the internal temperature changes.
[LOW], [MIDDLE], [HIGH] : Keeps the fan speed according to the setting. If the internal temperature exceeds the limit, [AUTO] is applied.

Front panel security lockout

You can enable/disable the front panel security lockout.

Item	BUTTON LOCK	N/A
Value	LOCK, UNLOCK	

Backup/Restore

You can backup/restore the settings of the NJR-L.

Item	BACKUP/RESTORE	N/A
Value	-	

Reboot

Item	REBOOT	@RBT
Value	-	

Initialization of all settings

You can initialize all settings or settings except for RS-232C and LAN communication settings.

Item	INITIALIZATION	@CLR
Value	ALL, NORMAL	

[ALL] : Initializes all settings.

[NORMAL] : Initializes settings except for RS-232C and LAN communication settings.

【RS-232C (P.29)】

【LAN (P.30)】

Note

To restore settings, make a backup copy.

Status

I/O signal status and the NJR-L status can be viewed from the IP-NINJAR Configurator or NJR-CTB (IP-NINJAR Management Platform).

Factory default list

Item		Default
DIP switch	No.1 to 4	OFF
Output	SIGNAL OUTPUT	ON
	DDC POWER CONTROL	ON
	SIGNAL FORMAT	AUTO
	HDCP AUTHENTICATION	HDCP INPUT ONLY
	HOTPLUG MASK	OFF
Input	NO INPUT MONITORING	10s
	HDCP INPUT	NOT SUPPORT
Input channel automatic switching	AUTO SWITCHING	OFF
	SIGNAL ON PRIORITY	1
	SIGNAL OFF PRIORITY	1
	IGNORING DURATION	0s
Output audio	MUTE	OFF
Input audio	SDVoE AUDIO	DIGITAL
EDID	EDID SELECTION	BUILT-IN EDID
	RESOLUTION	3840x2160@60Hz 4:4:4
	EDID COPY	---
	SIGNAL FORMAT	HDMI
	FRAME RATE	60Hz
	DEEP COLOR	24-BIT COLOR
	AUDIO FORMAT	PCM: 48kHz Dolby Digital, AAC, Dolby Digital+, DTS, DTS-HD Dolby TrueHD: OFF
	SPEAKER CONFIGURATION	2
RS-232C	PARAMETERS	BPS: 9600, LENGTH: 8, PARITY: NONE, STOP: 1
	INPUT CHANNEL SELECTION	USB HOST 3
LAN	IP ASSIGNMENT	DHCP/AutoIP
	IP ADDRESS	192.168.1.199
	SUBNET MASK	255.255.255.0
	GATEWAY ADDRESS	0.0.0.0
	MAC ADDRESS	---
	AUTO DISCONNECT	30s
	LAN THROUGH	OFF
Start-up settings	INPUT CHANNEL	LAST CHANNEL
	USB HOST	LAST CHANNEL
	BUTTON LOCK	AUTO
System	USB-C POWER DELIVERY	75W
	USB-C FUNCTION	FULL
	USB HOST LOCK	UNLOCK
	FAN SPEED	AUTO
	BUTTON LOCK	UNLOCK

License

The following table shows the licensed third-party software packages used by the NJR-L.
Transferring, copying, disassembling, decompiling, or reverse-engineering the included software other than open source software that is licensed by GPL, LGPL, or other licenses are prohibited.

OSS	License	URL
FreeRTOS	MIT	https://github.com/aws/amazon-freertos/blob/main/LICENSE
lwIP	Modified BSD	https://savannah.nongnu.org/projects/lwip/

Specification

Product specification

		NJR-L11UC-T	NJR-L21UC-R
Video/Audio input	USB-C	1 input	
		DisplayPort Alternate Mode on USB Type-C*1, DisplayPort 1.2, HDCP 1.4/2.2	
		640x480@60 to 3840x1600@60 Reduced Blanking 480p, 576p to 3840x2160@ 24/25/30/50/59.94/60 (4:4:4), 4096x2160@ 24/25/30/50/59.94/60 (4:4:4) Color depth: 24/30/36 bits *For all supported video signals, see the table below.	
		LPCM: Up to 2 channels Sampling frequency: 32/44.1/48/88.2/96/176.4/192 kHz Reference level: -20 dBFS, Max. input level: 0 dBFS	
		USB 2.0 compatible Host side, RS-232C USB PD (Power Delivery)*2 Supply up to 75 W (5 V 3 A, 9 V 3 A, 15 V 3 A, 20 V 3.75 A)	
		Connector: USB Type-C Maximum distance*3: 6.5 ft. (2 m)	
	10GbE*5	—	1 input
		SDVoE, AES-128 Deep Color/HDR*4	
		*Supported video signals are the same as those of HDMI.	
		RS-232C/LAN/USB 2.0 compatible	
		Connector: RJ-45 Maximum distance*3: 328 ft. (100 m) Cable: CAT6A (STP)	
Video/Audio output	HDMI	—	1 output
		HDMI/DVI 1.0 TMDS single link, HDCP 1.4/2.2 TMDS clock: Up to 300 MHz, TMDS data rate: Up to 18 Gbps Deep Color/HDR*4	
		640x480@60 to 3840x1600@60 Reduced Blanking 480i, 576i to 3840x2160@ 24/25/30/50/59.94/60 (4:4:4), 3840x2160@ 50/59.94/60 (4:2:0), 4096x2160@ 24/25/30/50/59.94/60 (4:4:4), 4096x2160@ 50/59.94/60 (4:2:0) Color depth: 24/30/36 bits *For all supported video signals, see the table below.	
		LPCM: Up to 8 channels Sampling frequency: 32/44.1/48/88.2/96/176.4/192 kHz Reference level: -20 dBFS, Maximum output level: 0 dBFS	
		Connector: HDMI Type A Maximum distances*3: 98 ft. (30 m) (1080p@60), 39 ft. (12 m) (4K@60)	
	10GbE*5	1 output	—
		SDVoE, AES-128 Deep Color/HDR*4	
		*Supported video signals are the same as those of HDMI.	
		RS-232C/LAN/USB 2.0 compatible	
		Connector: RJ-45 Maximum distance*3: 328 ft. (100 m) Cable: CAT6A (STP)	
Other I/F	RS-232C	1 port, Connector: Captive screw (3-pin)	
	LAN	1 port, 10Base-T/100Base-TX (Auto Negotiation), Auto MDI/MDI-X, Connector: RJ-45	
	USB*6*7	—	Host side 1 port, USB 2.0 compatible, RS-232C Connector: Type-C × 1
		Device side 1 port, USB 2.0 compatible, Supply up to 5 V 500 mA / port Connector: Type-C × 1	Device side 3 ports, USB 2.0 compatible, Supply up to 5 V 500 mA / port Connector: Type-C × 1, Type-A × 2
Functions	Control	Unsolicited notification	
	Others	EDID emulation	Automatic input switching, EDID emulation, Last memory, Anti-snow, Connection reset*8, Button security lockout, USB host switching (3 ports)
General	Power*2	DC 24 V 4.0 A DC 12 V 1.8 A	DC 24 V 4.3 A DC 12 V 1.8 A
		AC adapter: AC 100 V - 240 V ±10%, 50 Hz/60 Hz ±3 Hz、DC 24 V 5 A 120 W or AC 100 V - 240 V ±10%, 50 Hz/60 Hz ±3 Hz、DC 12 V 3 A 36.0 W	
	Power consumption	DC 24 V 18 W (93 W with External loading) DC 12 V 13 W (15 W with External loading)	DC 24 V 26 W (101 W with External loading) DC 12 V 15 W (22 W with External loading)

		NJR-L11UC-T	NJR-L21UC-R
General	Dimensions	4.2 (W) × 1.1 (H) × 7.9 (D)” (106 (W) × 28 (H) × 200 (D) mm) (Excluding connectors and the like)	8.3 (W) × 1.2 (H) × 5.9 (D)” (210 (W) × 30 (H) × 150 (D) mm) (Excluding connectors and the like)
	Weight	1.8 lbs. (0.8 kg)	2.4 lbs. (1.1 kg)
	Temperature	Operating: 32°F to 104°F (0°C to +40°C), Storage: -4°F to +176°F (-20°C to +80°C)	
	Humidity	20% to 90% (Non Condensing)	

*1 DisplayPort to USB-C cable or HDMI to USB-C cable are not supported.
*2 For USB PD (Power Delivery), use DC 24 V power supply. For supplying power of more than 60 W, use an USB-C cable supporting 5 A.
*3 The maximum specified distances may not be achievable with some device combinations, cabling method, or other manufacturer’s cable. For the same reasons, video signal disturbances or interruptions may occur, even if signals are within the specified distance (cable length) parameters.
The maximum cable length varies depending on the connected devices. The specifications have been qualified under following conditions:
- USB-C DisplayPort Alternate Mode (4K@60) : When USB3.2 Gen1 Type-C cable was used and signal of 3840x2160@60 24 bits was transmitted.
- HDMI (1080p@60) : When IDK cable was used and signal of 1080p@60 24 bits was transmitted.
- HDMI (4K@60) : When IDK’s 18 Gbps supported cable was used and signal of 3840x2160@60 24 bits was transmitted.
- 10GbE : When CAT6A (STP) cable is used.

*4 x.v.Color/3D/ARC/HEC/CEC are not supported.
*5 For 10GbE extension, use this product in combination with IDK’s other SDVoE supported product.
*6 For connecting USB hubs, up to two tiers can be cascaded.
*7 USB devices may not perform correctly depending on the environment and connected devices.
*8 It creates the same condition as if the cable were physically disconnected and reconnected. This feature only works for the NJR’s output. Connecting other devices between the NJR’s outputs and sink devices, may interfere with the operation of this feature.

Supported video signals

Signal	Resolution	Frame Rate [Hz]	Pixel Clock [MHz]	Color Depth [bits]	INPUT		OUTPUT
					USB-C*1	HDMI 10GbE	HDMI 10GbE
640x480@60	640x480	59.94	25.18	24/30/36	○	○	○
800x600@60	800x600	60.32	40.00	24/30/36	○	○	○
1024x768@60	1024x768	60.00	65.00	24/30/36	○	○	○
1280x768@60	1280x768	59.87	79.50	24/30/36	○	○	○
1280x800@60	1280x800	59.81	83.50	24/30/36	○	○	○
1280x960@60	1280x960	60.00	108.00	24/30/36	○	○	○
1280x1024@60	1280x1024	60.02	108.00	24/30/36	○	○	○
1360x768@60	1360x768	60.02	85.50	24/30/36	○	○	○
1366x768@60	1366x768	59.79	85.50	24/30/36	–	○	○
1400x1050@60	1400x1050	59.98	121.75	24/30/36	○	○	○
1440x900@60	1440x900	59.89	106.50	24/30/36	○	○	○
1600x900@60	1600x900	59.95	118.25	24/30/36	○	○	○
1600x1200@60	1600x1200	60.00	162.00	24/30/36	○	○	○
1680x1050@60	1680x1050	59.95	146.25	24/30/36	○	○	○
1920x1080@60 RB	1920x1080	59.93	138.50	24/30/36	○	○	○
1920x1200@60 RB	1920x1200	59.95	154.00	24/30/36	○	○	○
2048x1152@60 RB	2048x1152	60.00	162.00	24/30/36	○	○	○
2560x1080@60	2560x1080	60.00	198.00	24/30/36	○	○	○
2560x1440@60 RB	2560x1440	59.95	241.50	24/30/36	○	○	○
2560x1600@60 RB	2560x1600	59.97	268.50	24/30/36	○	○	○
3240x1080@60 RB	3240x1080	59.96	226.50	24/30/36	○	○	○
3440x1440@60 RB	3440x1440	59.97	319.75	24/30/36	○	○	○
3840x1080@60 RB	3840x1080	59.97	266.50	24/30/36	○	○	○
3840x1600@60 RB	3840x1600	59.99	395.00	24/30/36	○	○	○
480i	720x480	59.94	27.00	24/30/36	–	○	○
480p	720x480	59.94	27.00	24/30/36	○	○	○
576i	720x576	50.00	27.00	24/30/36	–	○	○
576p	720x576	50.00	27.00	24/30/36	○	○	○
720p@50	1280x720	50.00	74.25	24/30/36	○	○	○
720p@59.94	1280x720	59.94	74.18	24/30/36	○	○	○
720p@60	1280x720	60.00	74.25	24/30/36	○	○	○
1080i@50	1920x1080	25.00	74.25	24/30/36	–	○	○
1080i@59.94	1920x1080	29.97	74.18	24/30/36	–	○	○
1080i@60	1920x1080	30.00	74.25	24/30/36	–	○	○
1080p@50	1920x1080	50.00	148.50	24/30/36	○	○	○
1080p@59.94	1920x1080	59.94	148.35	24/30/36	○	○	○
1080p@60	1920x1080	60.00	148.50	24/30/36	○	○	○
3840x2160@23.98	3840x2160	23.98	296.70	24/30/36	○	○	○
3840x2160@24	3840x2160	24.00	297.00	24/30/36	○	○	○
3840x2160@25	3840x2160	25.00	297.00	24/30/36	○	○	○
3840x2160@29.97	3840x2160	29.97	296.70	24/30/36	○	○	○
3840x2160@30	3840x2160	30.00	297.00	24/30/36	○	○	○
3840x2160@50	3840x2160	50.00	594.00	24/30/36*2	○	○	○
3840x2160@59.94	3840x2160	59.94	593.41	24/30/36*2	○	○	○
3840x2160@60	3840x2160	60.00	594.00	24/30/36*2	○	○	○
4096x2160@23.98	4096x2160	23.98	296.70	24/30/36	○	○	○
4096x2160@24	4096x2160	24.00	297.00	24/30/36	○	○	○
4096x2160@25	4096x2160	25.00	297.00	24/30/36	○	○	○
4096x2160@29.97	4096x2160	29.97	296.70	24/30/36	○	○	○
4096x2160@30	4096x2160	30.00	297.00	24/30/36	○	○	○
4096x2160@50	4096x2160	50.00	594.00	24/30/36*2	○	○	○
4096x2160@59.94	4096x2160	59.94	593.41	24/30/36*2	○	○	○
4096x2160@60	4096x2160	60.00	594.00	24/30/36*2	○	○	○

RB: Reduced Blanking
*1 YCbCr 4:2:0 is not supported.
*2 For RGB/YCbCr 4:4:4, only 24 bit is supported.

For best results, please confirm that the source device(s) video output can be configured to match the listed formats above. For questions regarding other input video signals, please contact your IDK representative.

Troubleshooting

This chapter provides recommendations in case difficulties are encountered during NJR-L setup and operation.

In case the NJR-L does not work correctly, please check the following items first.

- Are the NJR-L and all devices connected to an active power source and are they powered on?
- Are signal cables connected correctly?
- Are there any loose or partially mated connections?
- Are the interconnecting cables specified correctly to support adequate bandwidth?
- Are specifications of connected devices matched to each other?
- Are configuration settings for the connected devices correct?
- Is there any nearby equipment that may cause electrical noise/RF interference?

Use the NJR-L built-in status display features to check for input signal presence and format. Also use the status display features to check for the presence of connected sink devices as well as for EDID and HDCP compatibility.

If difficulties persist, please refer to the peripheral device manuals as well, since connected equipment may be the cause of the trouble.

If the trouble persists, please contact us after checking the following items.

- Does the problem occur with all the signal connectors?
- Does the problem occur when you connect the source and display devices directly, bypassing the NJR-L?

USB-C Encoder/Decoder

NJR-L11UC-T/L21UC-R

User Guide

www.idkav.com

Headquarters

IDK Corporation

7-9-1 Chuo, Yamato, Kanagawa, 242-0021, JAPAN

TEL: +81-46-200-0764 FAX: +81-46-200-0765

Email: idk_eng@idk.co.jp

USA

IDK America Inc.

72 Grays Bridge Road Suite 1-C, Brookfield, CT 06804, United States

TEL: +1-203-204-2445

Email: sales@idkav.com

Europe

IDK Europe GmbH

Lise-Meitner-Str. 6, D-40878 Ratingen, Germany

TEL: +49-2102-578-301-0

Email: info@idkav.eu

Vietnam

IDK Corporation Vietnam

Hanoi Representative Office

TEL: +84-247-108-8866

Email: info_en@idk.co.jp

IDK Corporation Vietnam

Ho Chi Minh Representative Office

TEL: +84-28-7108-8954

Email: info_en@idk.co.jp